CIRCULA

New generation

pumps

Mercurio

Electronic pump

Use

Mercurio electronic pump is widely used in central heating, air conditioning, solar and heat pump systems.

Its use, compared to old-type pumps, saves electricity up to 80%.

Materials

motor housing: **aluminum**
rotor : **plastic**
shaft: **ceramic**
bearings: **ceramic**
insulation: **biodegradable foam**
included: **two steel half-unions with gaskets and electric cable with plug**

Technical details

liquid temperature: **from -10°C to 110°C**
acceptable working pressure: **10 bar**
acceptable ambient temperature: **40°C**
circulated liquid : **heating water according to VDI2035 and water-glycol at 1:1 ratio**
supply voltage: **220 - 230V (50Hz)**
protection class: **IP44**
insulation class: **F**
energy efficiency index: **EEI ≤ 0.20**
operating modes: **AUTO mode; I, II, III modes; HPP mode; LPP mode; HCP mode; LCP mode, NIGHT mode**

Pump parameters

SIZE RANGE	POWER [W]	MAX FLOW [m³/h]	MAX HEAD [m]	BODY CONNECTOR DIAMETER
CI-PE-MERCURIO 25/40	5-22	2,6	4	1 1/2”
CI-PE-MERCURIO 25/60	5-45	3,6	6	1 1/2”

Advantages

- additional venting and emergency rotor start-up, thanks to its innovative inspection sleeve located in the shaft axis
- self-venting design

Possibility of additional venting

Possibility of rotor start-up

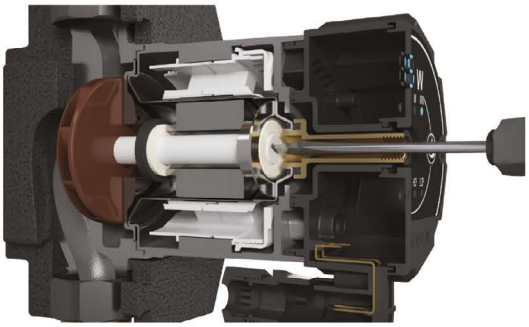

The pump is automatically vented when you hold down the "night reduction" button for 5 s.

Dimensions

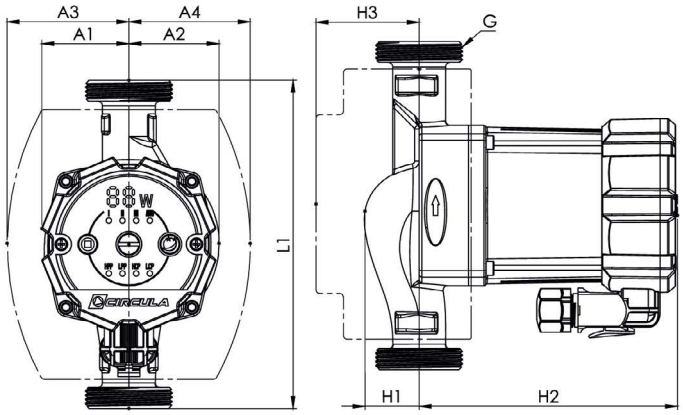

L1	A1	A2	A3	A4	H1	H2	H3	G
180	47	49	67	67	30	140	57	1 1/2
180	47	49	67	67	30	140	57	1 1/2

Hydraulic characteristics of pumps

CI-PE-MERCURIO 25/40

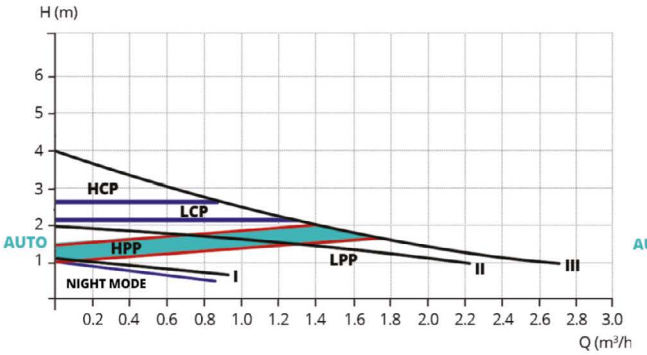

CI-PE-MERCURIO 25/60

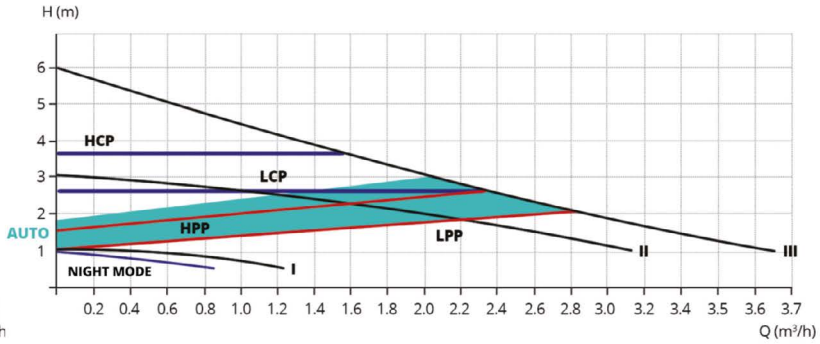

Titanio

Electronic pump

Use

Titanio electronic pump is widely used in central heating, air conditioning, solar and heat pump systems.

Functionality

- 10 operating modes (characteristics: proportional pressure, constant pressure, constant speed) +AUTO mode
- equipped with an electric cable with plug and seals

Technical details

liquid temperature: **2°C ÷ 95°C**
acceptable ambient temperature: **0-40°C**
temperature class: **TF=95°C**
maximum operating pressure: **10 bar**
supply voltage: **230V (50Hz)**
protection class: **IP44**
insulation class: **E**
highest energy efficiency index: **EEI ≤ 0.20**
circulated liquid: **water (conforms to the PN-C-04607:1993 standard and should be free of solid particles, fibers and impurities)**

Pump parameters

SIZE RANGE	BODY CONNECTOR DIAMETER	MAX FLOW [m3/h]	HEAD [m]	POWER [W]	CURRENT [A]
CI-TITANIO 25/40-180	G 1 1/2”	2,5	0,7 - 4	25	0,3
CI-TITANIO 25/60-180	G 1 1/2”	3,2	1 - 6	45	0,5
CI-TITANIO 25/60-130	G 1 1/2”	3,2	1 - 6	45	0,5
CI-TITANIO 25/80-130	G 1 1/2”	3,4	1,5 - 8	65	0,65
CI-TITANIO 25/80-180	G 1 1/2”	3,6	1,5 - 8	65	0,65
CI-TITANIO 32/80-180	G 2”	4	1,5 - 8	65	0,65

Advantages

- modern and high-efficiency EC motor with electronic control and motor current protection in case of rotor blockage
- equipped with PWM signal control connector
- pump mode indicator with error code display in case of damage
- automatic pump venting function
- pump start-up function
- compact pump design

Dimensions

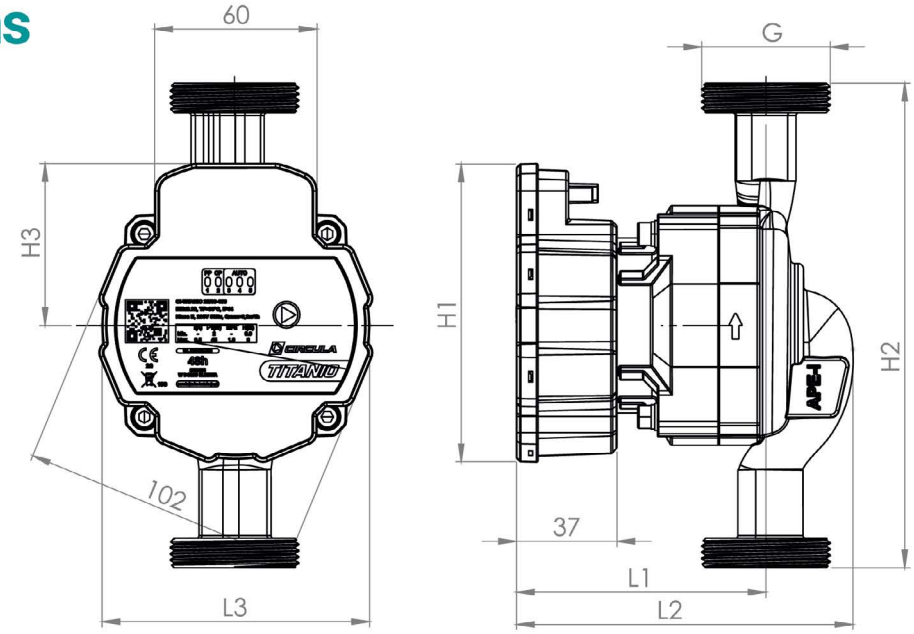

SIZE RANGE	DIMENSION [mm]						
	L1	L2	L3	H1	H2	H3	G
CI-TITANIO 25/X-130	93	126	99	110	130	60	G 1 1/2"
CI-TITANIO 25/X-180					180		G 1 1/2"
CI-TITANIO 32/X-180							G 2"

Hydraulic characteristics of pumps

CI-TITANIO 25/40

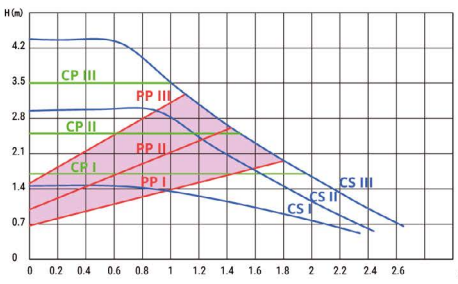

CI-TITANIO 25/60

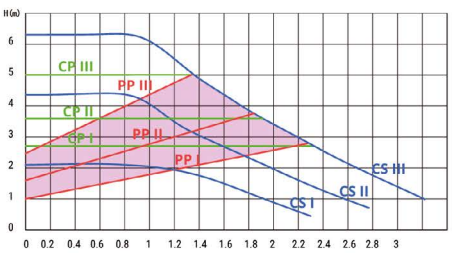

CI-TITANIO 25/80, CI-TITANIO 32/80

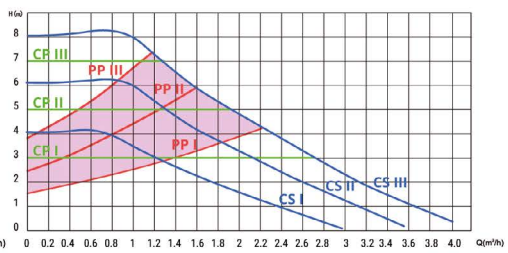

PP proportional pressure curve

CP constant pressure curve

CS fixed curve

AUTO

Helio

Electronic pump

Use

Helio electronic pump is widely used in central heating, air conditioning, solar and heat pump systems.
Its use, compared to old-type pumps, saves electricity up to 80%.

Technical details

energy efficiency index: **EEI ≤ 0.20**
liquid temperature: **from -10°C to 110°C**
acceptable operating pressure: **10 bar**
acceptable ambient temperature: **40°C**
circulated liquid: **heating water according to VDI2035 and water-glycol at 1:1 ratio**
supply voltage: **230V (50Hz)**
protection class: **IP44**
insulation class: **F**
6 speeds + AUTO mode
self-venting design

Hydraulic characteristics of pumps

CI-HELIO 25/40-180

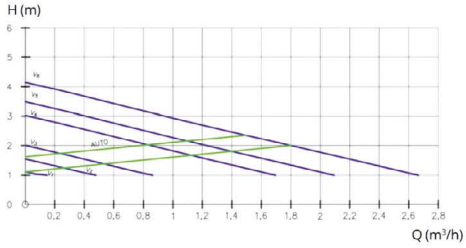

CI-HELIO 25/60-130, CI-HELIO 25/60-180

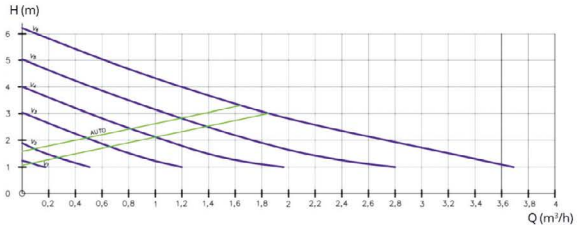

Dimensions

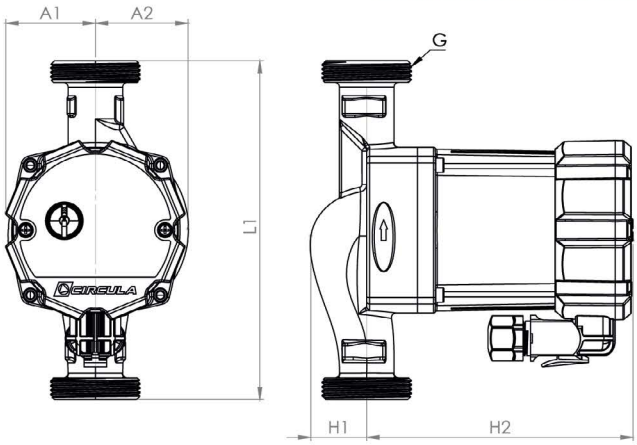

SIZE RANGE	DIMENSION [mm]					
	L1	A1	A2	H1	H2	G
HELIO 25/60-130	130	47	49	30	140	1 1/2"
HELIO 25/40-180	180	47	49	30	140	1 1/2"
HELIO 25/60-180	180	47	49	30	140	1 1/2"

Pump parameters

SIZE RANGE	MAX FLOW [m3/h]	BODY CONNECTOR DIAMETER	MAX HEAD [m]	POWER
Helio 25/40-180	2,3	G 1 1/2"	4	22
Helio 25/60-180	3,1	G 1 1/2"	6	45
Helio 25/60-130	3,1	G 1 1/2"	6	45

Platino

Electronic circulation pump
for drinking water

Use

Platino electronic pump is widely used in domestic hot water systems.
It is intended for drinking water only.

Technical details

max head: **H max=1.2 m**
max flow: **Q max=0.6 m3/h**
supply voltage: **230 V, 50 Hz**
rated power: **6 W**
power consumption **P1 min=2 W**
max current input **P1 max=9 W**
insulation class: **F**
protection class: **IP44**
max domestic hot water temperature: **TF=95°C**
max operating pressure: **PN=10 bar**
current: **0,11 A**
body connector **diameter 1/2"**
liquid circulated: **meeting the requirements of the Regulation of the Minister of Health of 7 December 2017, on the quality of water intended for human consumption.**

Advantages

- with a programmer
- with a temperature sensor

Hydraulic characteristics of pumps

CI-P-PLATINO 15

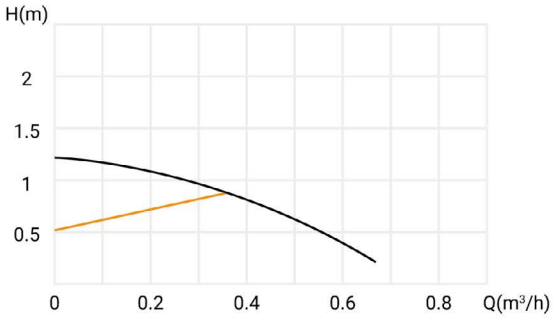

Dimensions

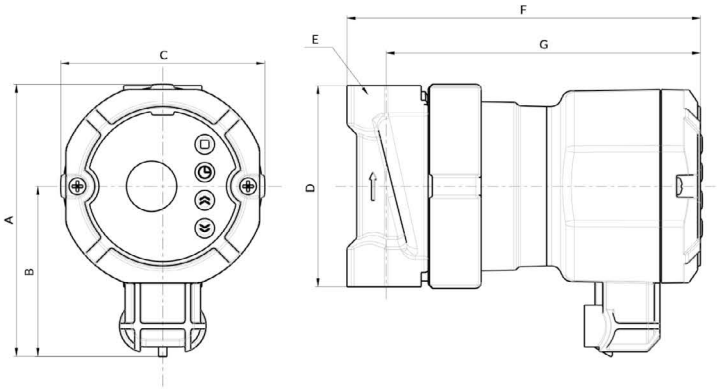

SIZE RANGE	TYPE
CI-P-PLATINO 15	15/10

DIMENSION [mm]						
A	B	C	D	E	F	G
97	61	73	72	G1/2	126	112

Galio

Electronic pump

Use

Galio electronic pump is widely used in central heating, air conditioning, solar and heat pump systems.

Functionality

- equipped with a control panel with LED display
- automatically venting design
- equipped with a central screw for venting and starting-up the rotor
- electric cable and half unions included

Technical details

liquid temperature: **from 2°C to 110°C**

acceptable working pressure: **10 bar**

acceptable ambient temperature: **40°C**

circulated liquid: **heating water according to VDI2035 and water-glycol at 1:1 ratio**

supply voltage: **220 - 230V (50Hz)**

protection class: **IP44**

insulation class: **F**

energy efficiency index: **EEI≤0.23**

Hydraulic characteristics of pumps

CI-GALIO 25/80-180

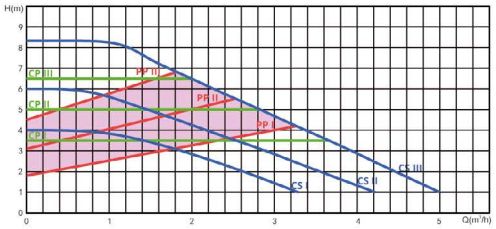

CI-GALIO 32/80-180

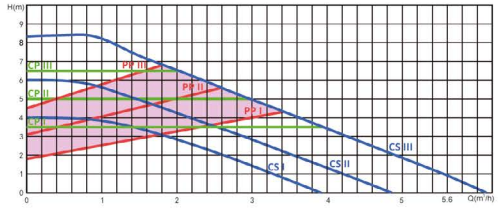

PP proportional pressure curve | **CP** constant pressure curve | **CS** fixed curve | **AUTO**

Dimensions

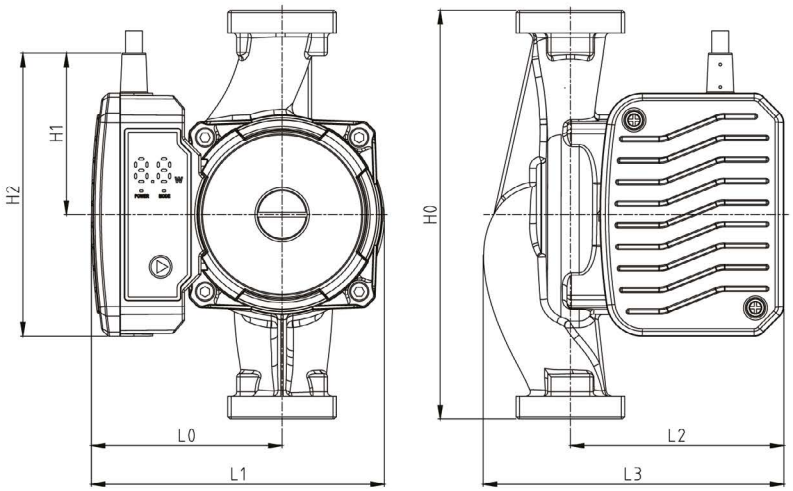

SIZE RANGE	DIMENSION (mm)							NET WEIGHT
	L0	L1	L2	L3	H0	H1	H2	kg
CI-GALIO 25/80-180	84	130	94	132	180	71	125	2,7
CI-GALIO 32/80-180								3,0

Pump parameters

SIZE RANGE	POWER (W)	MAX FLOW (m^3/h)	MAX HEAD (m)	BODY CONNECTOR DIAMETER
CI-PE-GALIO 25/80	80	5	0,3-8	1 1/2”
CI-PE-GALIO 32/80	80	6	0,3-8	2”

Torio

Electronic circulated pump
for drinking water

Use

Torio electronic pump is widely used in domestic hot water systems. Its use, compared to old-type pumps, saves electricity up to 80%.

Technical details

max head: **1.2 m**
max flow: **12 l/min (0.72 m3/h)**
max water temperature in the system: **95°C**
acceptable operating pressure: **10 bar**
acceptable ambient temperature: **40°C**
circulated liquid: **pure water, non-aggressive, non-explosive, free of mineral oils**
supply voltage: **220 - 230V (50Hz)**
protection class: **IP44**
insulation class: **F**
6 speeds + ECO mode

Material

body: **stainless steel**
motor housing: **plastic**
rotor: **composite plastic**
rotor axis: **stainless steel/ceramic**
bearings: **ceramic**
electric cable with plug included

Hydraulic characteristics of pumps

CI-P-TORIO 15/12

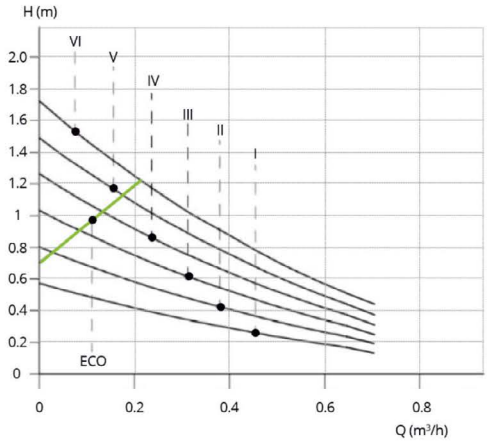

Dimensions

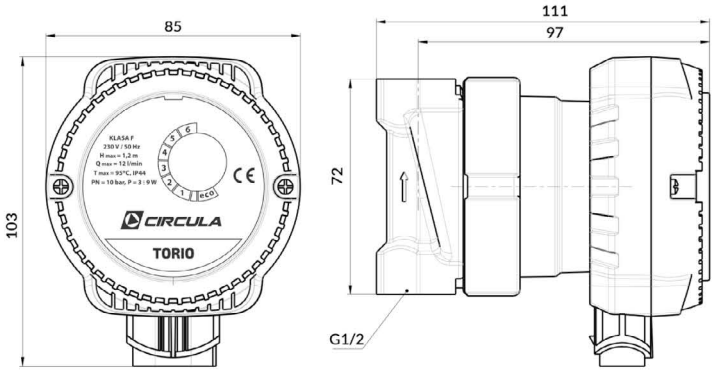

SIZE RANGE	TYPE
CI-P-TORIO 15/12	15/12

Selenio

Electronic pump

Use

Selenio electronic pump is widely used in central heating, air conditioning, solar and heat pump systems. **Its use, compared to old-type pumps, saves electricity up to 80%.**

Functionality

- equipped with a control panel with LED dispaly
- automatically venting design
- equipped with a central screw for venting and starting-up the rotor
- electric cable and half unions included

Technical details

liquid temperature: **from 2°C to 110°C**
acceptable working pressure: **10 bar**
acceptable ambient temperature: **40°C**
circulated liquid: **heating water according to VDI2035 and water-glycol at 1:1 ratio**
supply voltage: **220 - 230V (50Hz)**
protection class: **IP44**
insulation class: **F**
energy efficiency index: **EEI≤0.23**

Hydraulic characteristics of pumps

CI-SELEN 25/120-180

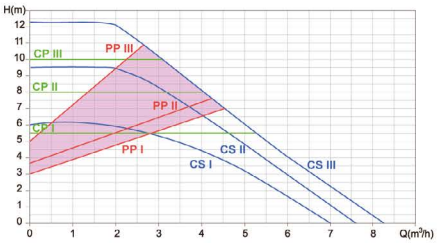

CI-SELEN 32/120-180

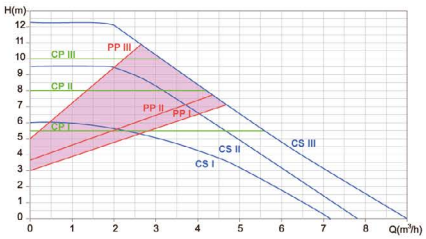

PP proportional pressure curve | **CP** constant pressure curve | **CS** fixed curve | **AUTO**

Dimensions

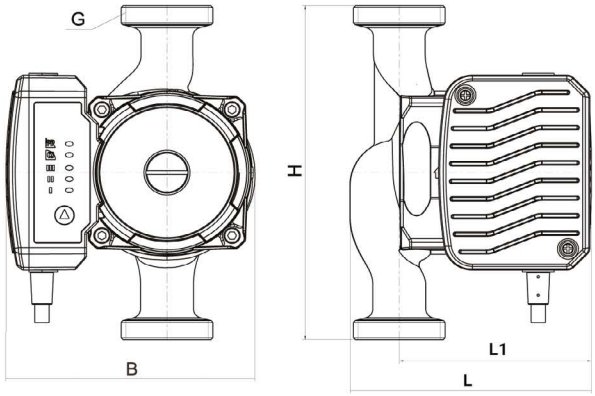

SIZE RANGE	DIMENSION (mm)					NET WEIGHT
	L	L1	H	B	G	kg
CI-SELEN 25/120-180	133	95	180	143	1 1/2"	3,1
CI-SELEN 32/120-180					2"	3,5
CI-SELEN 25/120-180					1 1/2"	3,1
CI-SELEN 32/120-180					2"	3,5

Pump parameters

SIZE RANGE	POWER (W)	MAX FLOW (m^3/h)	MAX HEAD (m)	BODY CONNECTOR DIAMETER
CI-SELEN 25/100-180	140	7,5	0-10	1 1/2"
CI-SELEN 32/100-180	140	8	0-10	2"
CI-SELEN 25/120-180	180	8,5	0-12	1 1/2"
CI-SELEN 32/120-180	180	9	0-12	2"

PC

Circulation pump
for drinking water

Use

Circulation pump can be used for drinking water in accordance with Commission Regulation (EC) No. 641/2009. High-quality asynchronous motor, no overload protection required. The capacity of the pump is regulated by a 3-position switch located on the electrical module box, which allows you to adjust the operation of the pump to the characteristics of the installation.

Technical details

liquid temperature: **from -10°C to 110°C**
acceptable working pressure: **10 bar**
acceptable ambient temperature: **40°C**
circulated liquid: **drinking water**
supply voltage: **1 ~ 230V ±10%**
frequency: **50Hz**
protection class: **IP44**
insulation class: **F**

Material

body: **cast iron covered inside with GLAZE 221**
motor housing: **aluminum**
impeller: **plastic**
shaft: **ceramic**
bearings: **ceramic**
included with pump: **electric cable with plug and 2 steel half-unions with gaskets**

Hydraulic characteristics of pumps

CI-PC 25/40-180

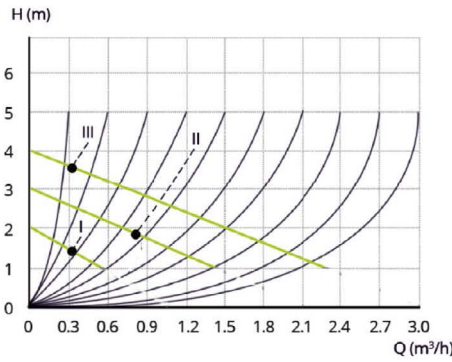

CI-PC 25/60-130, CI-PC 25/60-180,

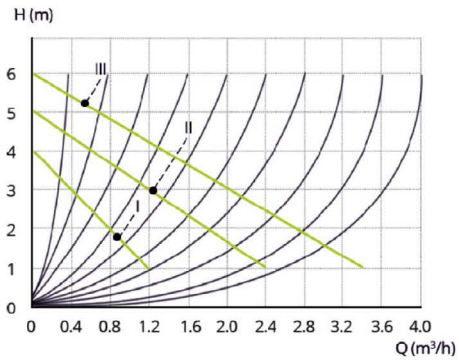

CI-PC 25/80-180, CI-PC 32/80-180

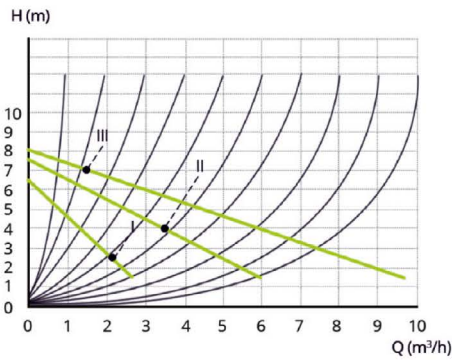

Dimensions

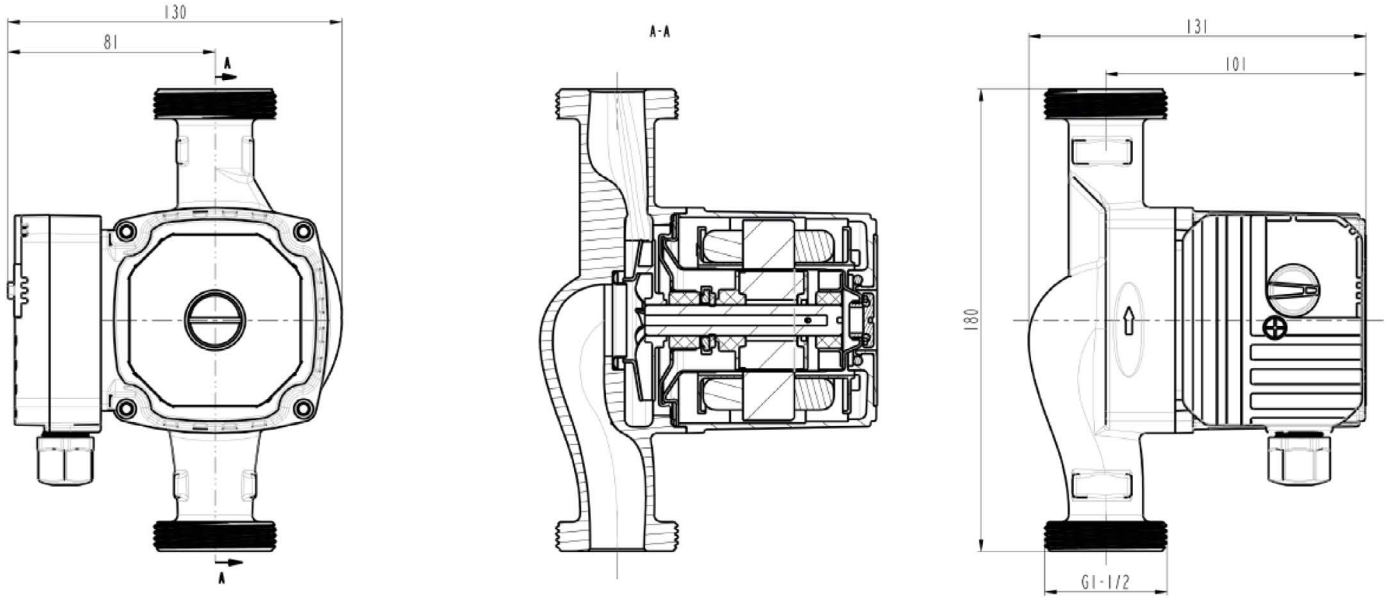

Pump parameters

SIZE RANGE	MAX FLOW (m^3/h)	MAX HEAD (m)	MOUNTING LENGTH (A - mm)	BODY CONNECTOR DIAMETER
CI-PC25/40-180	2,9	4	180	1 1/2"
CI-PC25/60-180	3,3	6	180	1 1/2"
CI-PC25/60-130	3,3	6	130	1 1/2"
CI-PC25/60-130 BPS*	3,3	6	130	1 1/2"
CI-PC25/80-180	6,9	8	180	1 1/2"
CI-PC32/80-180	9,6	8	180	2"

* without cable and half-unions

Arka Sp. z o.o.
ul. Ogrodowa 5,
76-004 Sianów
Poland

tel.: +48 94 341 77 19
fax +48 94 346 27 68

arka-instalacje.pl